PV SYSTEM

THIS 16.5 KWSTC, ROOF-MOUNTED PHOTOVOLTAIC (PV) SYSTEM IS TO BE INSTALLED AT THE SINGLE-FAMILY DWELLING IN FRESNO CA.
THE ENERGY PRODUCED BY THE PV SYSTEM SHALL BE INTERCONNECTED WITH THE UTILITY GRID THROUGH THE EXISTING ON-SITE ELECTRICAL EQUIPMENT VIA LOAD SIDE CONNECTION IN THE MAIN SERVICE PANEL. THIS PROJECT DOES NOT INCLUDE STORAGE BATTERIES.

SHEET INDEX

T1.0 COVER
A1.0 SITE PLAN
A2.0 MOUNTING & RACKING METHOD
E1.0 ELECTRICAL DIAGRAM
E2.0 SAFETY PLACARDS

PARTS LIST

QUANTITY	DESCRIPTION
55	Mission Solar 300 W PV Module
55	SolarEdge P320 Power Optimizer
68	Iron Ridge Stopper Sleeve
98	Quickmount PV Qbase
98	Quickmount PV Aluminum Standoff
98	L-Feet
144	Iron Ridge Universal Fastening Object
196	Lag Screws
392	Feet of IronRidge XR-100 Rail

SCOPE OF WORK

(55) PV MODULES (TOTAL: 985 SQ. FT.)
(2) 6.0 kW INVERTER
(55) SOLAREDGE POWER OPTIMIZERS
(98) ATTACHMENT POINTS @ 72" O.C. MAX.
(1) AC COMBINER PANEL, 240 VAC, NEMA 3R
(1) AC DISCONNECT, 240 VAC, NEMA 3R

SITE SPECIFICATIONS

RISK CATEGORY: II
EXPOSURE CATEGORY: C
ASCE 7-10 WIND SPEED (MPH): 110
ASCE 7-10 GROUND SNOW LOAD (PSF): 0

GOVERNING CODES

2016 CA ELECTRICAL CODE: § 110, 240, 250, 690, 705
2016 CA BUILDING CODE: § 1507.17, 1510.7, 3111
2016 CA RESIDENTIAL CODE: § R324, R908
2016 CA FIRE CODE: § 605.11
COUNTY OF FRESNO TITLE 15 ORDINANCE CODE
UNDERWRITERS LABORATORIES (UL) STANDARDS
OSHA 29 CFR 1910.269

CONSTRUCTION NOTES

1.) CONTRACTOR SHALL FIELD VERIFY ALL DIMENSIONS PRIOR TO INITIATING CONSTRUCTION.
2.) CONTRACTOR SHALL REVIEW ALL MANUFACTURER INSTALLATION DOCUMENTS PRIOR TO INITIATING CONSTRUCTION.
3.) ALL EQUIPMENT SHALL BE LISTED BY A NATIONALLY RECOGNIZED TESTING LABORATORY (NRTL) FOR ITS SPECIFIC APPLICATION.
4.) ALL EQUIPMENT SHALL BE RATED FOR THE ENVIRONMENT IN WHICH IT IS INSTALLED.
5.) ALL EQUIPMENT SHALL BE INSTALLED IN ACCORDANCE WITH THE MANUFACTURER'S INSTALLATION INSTRUCTIONS.
6.) ACCESS TO ELECTRICAL COMPONENTS OVER 150 VOLTS TO GROUND SHALL BE RESTRICTED TO QUALIFIED PERSONNEL.
7.) ALL CONDUCTORS SHALL BE COPPER AND RATED FOR 600 VOLTS AND 90°C WET ENVIRONMENT, UNLESS OTHERWISE NOTED.
8.) WHERE SIZES OF JUNCTION BOXES, RACEWAYS, AND CONDUITS ARE NOT SPECIFIED, CONTRACTOR SHALL SIZE THEM ACCORDING TO APPLICABLE CODES.
9.) GROUNDING ELECTRODE CONDUCTOR (G.E.C.) SHALL BE CONTINUOUS AND/OR IRREVERSIBLY SPLICED/WELDED.
10.) PV MODULE FRAMES SHALL BE BONDED TO RACKING RAIL OR BARE COPPER G.E.C. PER THE MODULE MANUFACTURER'S LISTED INSTRUCTION SHEET.
11.) PV MODULE RACKING RAIL SHALL BE BONDED TO THE BARE COPPER G.E.C. VIA AN APPROPRIATELY LISTED GROUNDING LUG.
12.) ALL JUNCTION BOXES, COMBINER BOXES, AND DISCONNECTS SHALL BE INSTALLED IN AN ACCESSIBLE LOCATION.
13.) ROOF ACCESS POINTS SHALL BE LOCATED AT A STRUCTURALLY SOUND POINT ON THE BUILDING AND NOT REQUIRE THE PLACEMENT OF LADDERS OVER EXTERIOR WALL OPENINGS SUCH AS WINDOWS OR DOORS.
14.) WORKING SPACE AROUND ELECTRICAL EQUIPMENT SHALL COMPLY WITH NEC 110.26.

Project:
FRESNO, CA, 93711

Project Details:
16.50 kWstc, 12.00 kW AC
FRESNO, COUNTY OF

REVISIONS

DESCRIPTION	DATE	REV
ORIGINAL	9/13/2018	A

Sheet Title:
COVER

Sheet Number:
T1.0

Sheet Size:
ANSI B - 17" x 11"

DESIGN & DRAFTING BY:
TAYLOR BOHLEN

"You can't go around building a better world for people. Only people can build a better world for people. Otherwise it's just a cage."
- Terry Pratchett

SepiSolar
POWER BY DESIGN

Reviewed & Approved by:
CM

NABCEP CERTIFIED PV Installation Professional

NOTE: ALL ROOF PLANES HAVE 20° PITCH
NOTE: EXISTING CONDUIT, JUNCTION BOXES, AND INVERTER ARE SHOWN IN GREY
NOTE: NEW CONDUCTORS SHALL BE ROUTED THROUGH EXISTING CONDUITS WHERE SHOWN. NO CONDUIT SHALL EXCEED 40% FILL, SEE PAGE E2.0 FOR DETAILS
NOTE: UPDATED AMPACITY CALCULATIONS FOR EXISTING CONDUITS AVAILABLE ON PAGE E2.0

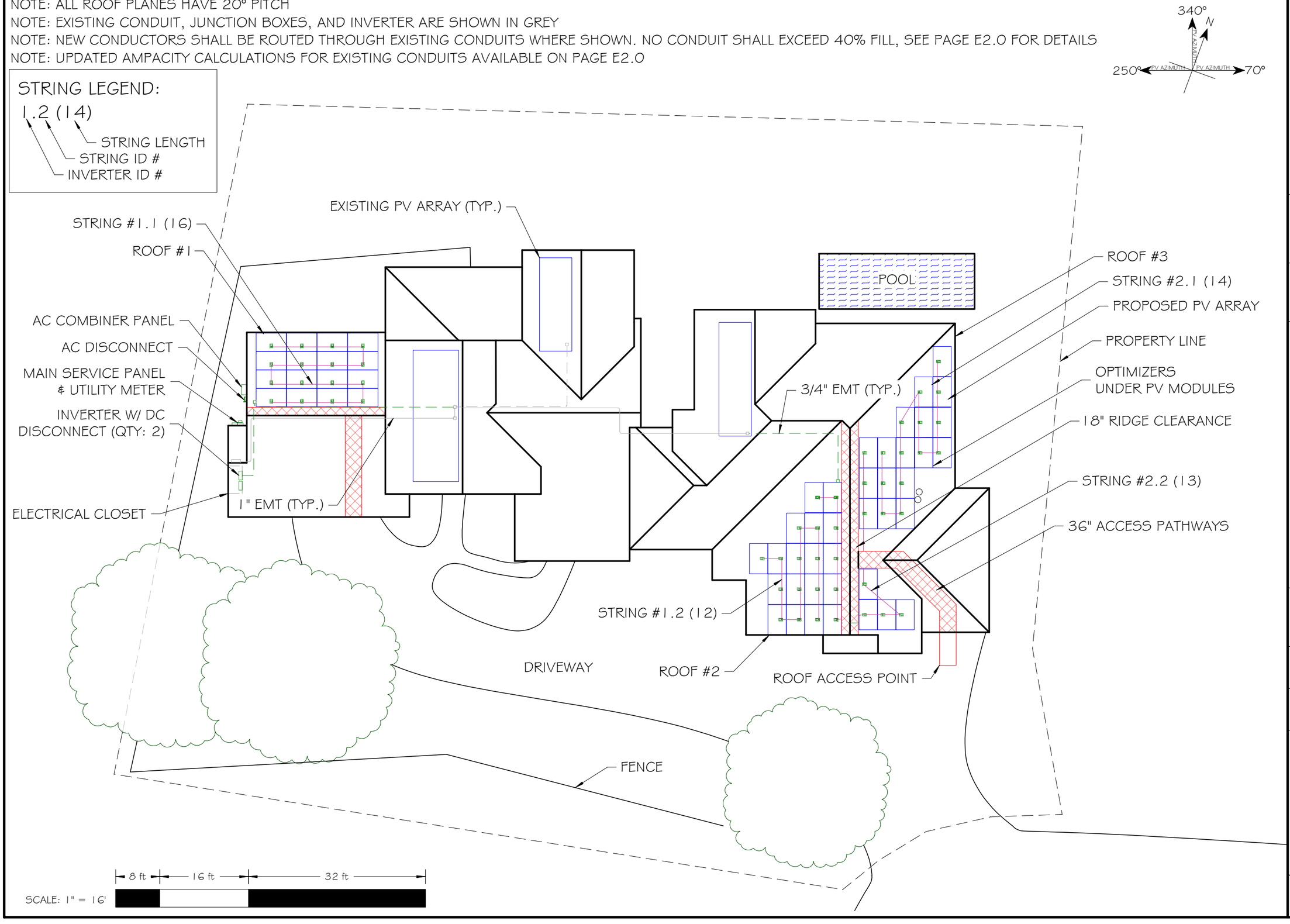

Project:
FRESNO, CA, 93711

Project Details:
16.50 kWstc, 12.00 kW AC
FRESNO, COUNTY OF

REVISIONS

DESCRIPTION	DATE	REV
ORIGINAL	9/13/2018	A

Sheet Title:
SITE PLAN

Sheet Number:
A1.0

Sheet Size:
ANSI B - 17" x 11"

DESIGN & DRAFTING BY:
TAYLOR BOHLEN

"You can't go around building a better world for people. Only people can build a better world for people. Otherwise it's just a cage."
- Terry Pratchett

SepiSolar
POWER BY DESIGN

Reviewed & Approved by:
CM

NABCEP CERTIFIED PV Installation Professional

STRUCTURAL CALCULATIONS

	QTY.		WEIGHT EA.		TOTAL
PV MODULE	55	x	40.10 LBS	=	2206 LBS
RACKING RAIL	392	x	1.00 LB/FT	=	392 LBS
ATTACHMENT	110	x	4.00 LBS	=	440 LBS
MICRO/OPT.	55	x	2.50 LBS	=	138 LBS
TOTAL WEIGHT: 3176 LBS					
ARRAY AREA: 984 SQ. FT.					
DEAD LOAD: 3.2 PSF					
POINT LOAD: 28.9 LBS					

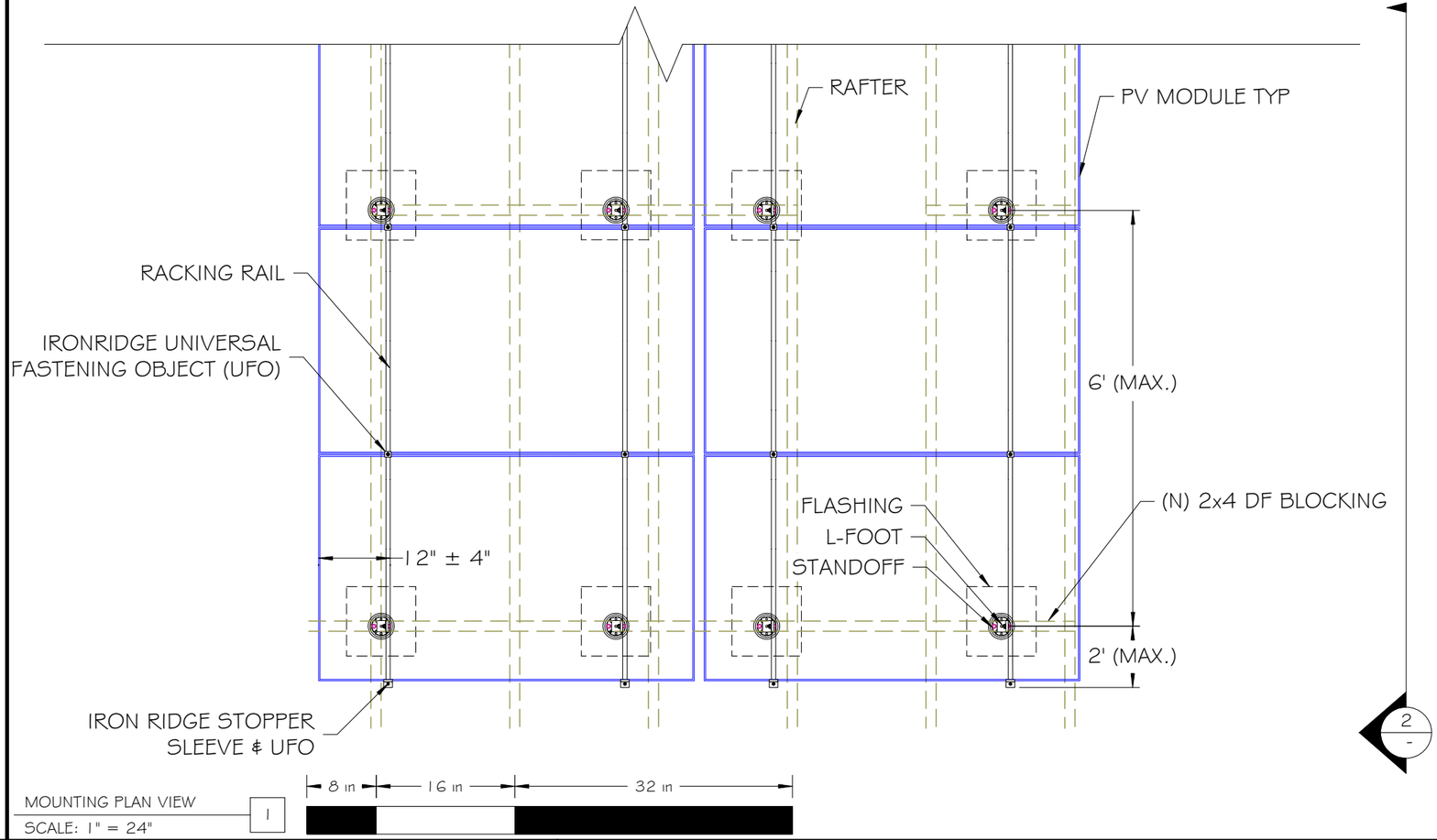

MOUNTING PLAN VIEW 1
SCALE: 1" = 24"

NOTE: ROOF PLANE #1 HAS RAFTERS AT 16" O.C. (TYP.)
ALL OTHER ROOF PLANES HAVE RAFTERS AT 24" O.C. (TYP.)

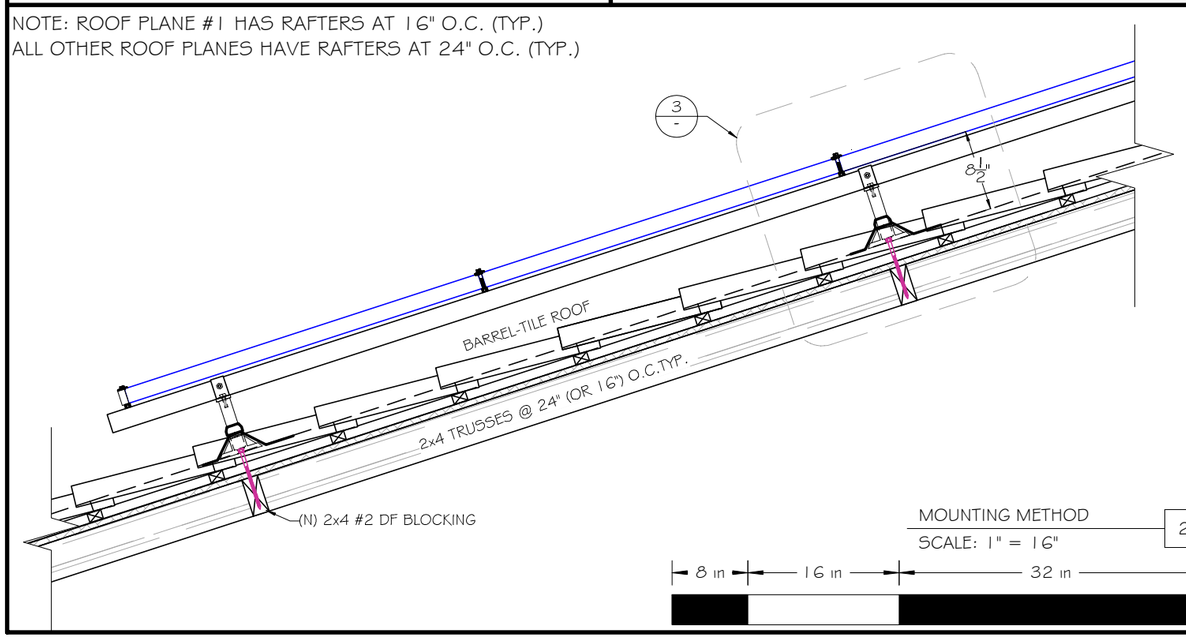

MOUNTING METHOD 2
SCALE: 1" = 16"

REFER TO MOUNTING MANUFACTURER'S INSTRUCTIONS FOR TYPE, SIZE, AND MINIMUM EMBEDMENT OF ROOF ATTACHMENTS, IF APPLICABLE.

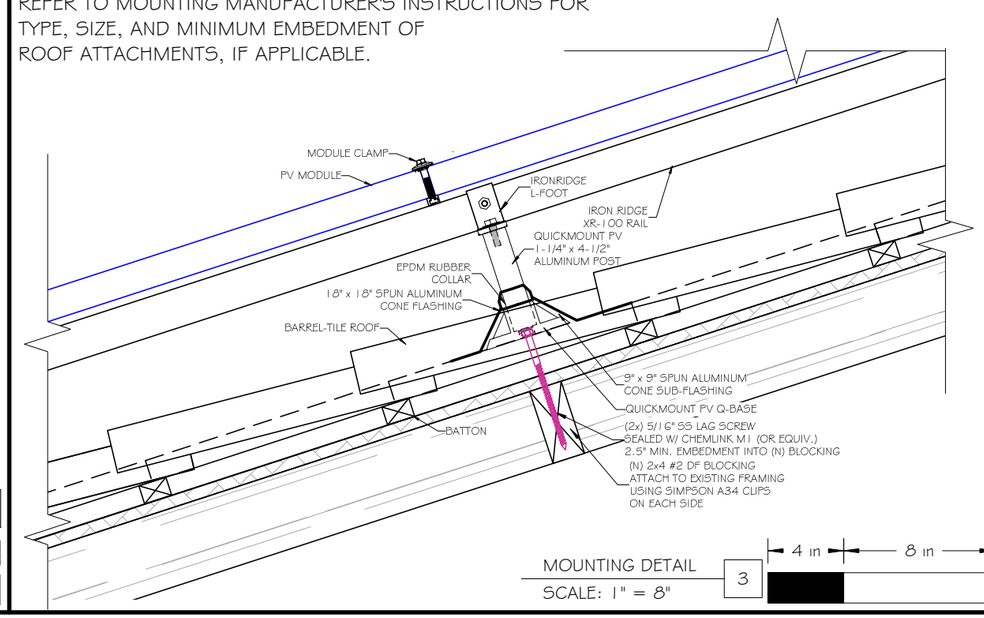

MOUNTING DETAIL 3
SCALE: 1" = 8"

Project:
FRESNO, CA, 93711

Project Details:
16.50 kWstc, 12.00 kW AC
FRESNO, COUNTY OF

REVISIONS

DESCRIPTION	DATE	REV
ORIGINAL	9/13/2018	A

Sheet Title:
MOUNTING & RACKING METHOD

Sheet Number:
A2.0

Sheet Size:
ANSI B - 17" x 11"

DESIGN & DRAFTING BY:
TAYLOR BOHLEN

"You can't go around building a better world for people. Only people can build a better world for people. Otherwise it's just a cage."
- Terry Pratchett

SepiSolar
POWER BY DESIGN

Reviewed & Approved by:
CM

NABCEP CERTIFIED PV Installation Professional

— = EQUIP. GROUNDING CONDUCTOR | —— = CIRCUIT CONDUCTOR | = FUSE | = CIRCUIT BREAKER | (N) = NEW EQUIP. | (E) = EXISTING EQUIP. | L1 = LINE 1 (BLACK) | L2 = LINE 2 (RED) | N = NEUTRAL (WHITE) | G = GROUND (GREEN) | = POSITIVE (RED) | = NEGATIVE (BLACK)

Array Configuration

System: 16.5 kWstc, 12 kW AC

Total PV Module Qty: 55

	Inv. #1	Inv. #2
Inverter I.D. #	Inv. #1	Inv. #2
Inverter AC Power (kW):	6.00	6.00
PV Power (kWstc):	8.40	8.10
Inverter DC:AC Ratio	1.40	1.35
Module Total Qty:	28	27
INPUT "A" String Qty:	1	1
INPUT "A" String Length:	16	14
INPUT "A" Max Open Circuit Voltage:	480	480
INPUT "A" Operating Voltage:	380	380
INPUT "A" Max Short Circuit Current:	15	15
INPUT "A" Operating Current:	12.6	11.1
INPUT "B" String Qty:	1	1
INPUT "B" String Length:	12	13
INPUT "B" Max Open Circuit Voltage:	480	480
INPUT "B" Operating Voltage:	380	380
INPUT "B" Max Short Circuit Current:	15	15
INPUT "B" Operating Current:	9.5	10.3

Power Optimizer Specifications

Model Number:	SolarEdge P320	
Max Input Power (W):	320	
Max Input Voc (VDC):	48	
Max Input Isc (A):	11.0	
Output Current (A):	15.0	
Output Voltage (VDC):	60	
Min. String Length:	8	Modules
Max. String Length:	20	Modules
Max. String Power (W):	6000	
Optimizer Quantity:	55	

PV Module Specifications

Model Number:	Mission Solar MSE300SQ5T		
Weight (lbs):	40.1		
Dimensions (in):	65.5 x 39.3 x 1.6		
Power @ STC (W):	300		
Voc (VDC):	40.2		
Vmp (VDC):	32.8	Voc Temp. Coeff. (%/°C):	-0.318
Isc (A):	9.61	Max Voltage (VDC):	1000
Imp (A):	9.17	Module Qty:	55

Inverter #1 - #2 Specifications

Model Number:	SolarEdge SE6000H-US [SI1]		
Power Rating (kW AC):	6.00		
Nominal AC Voltage (V):	240		
Max Output Current (A):	25.0		
CEC Weighted Efficiency:	99.0%		
Max DC Voltage (V):	480		
Operating DC Voltage (V):	380	Inverter Qty:	2

CEC Rating Calculation

Module PTC Rating (W)	x	No. of Modules	x	Average Inverter CEC Efficiency	=	CEC System Size	
276.9 W	x	55	x	0.99	=	15.08	kW AC

AC System Summary

NOMINAL SYSTEM VOLTAGE:	240	Volts AC
MAX CURRENT PER 690.8(A):	50	Amps
MAX CURRENT PER 690.8(B):	63	Amps

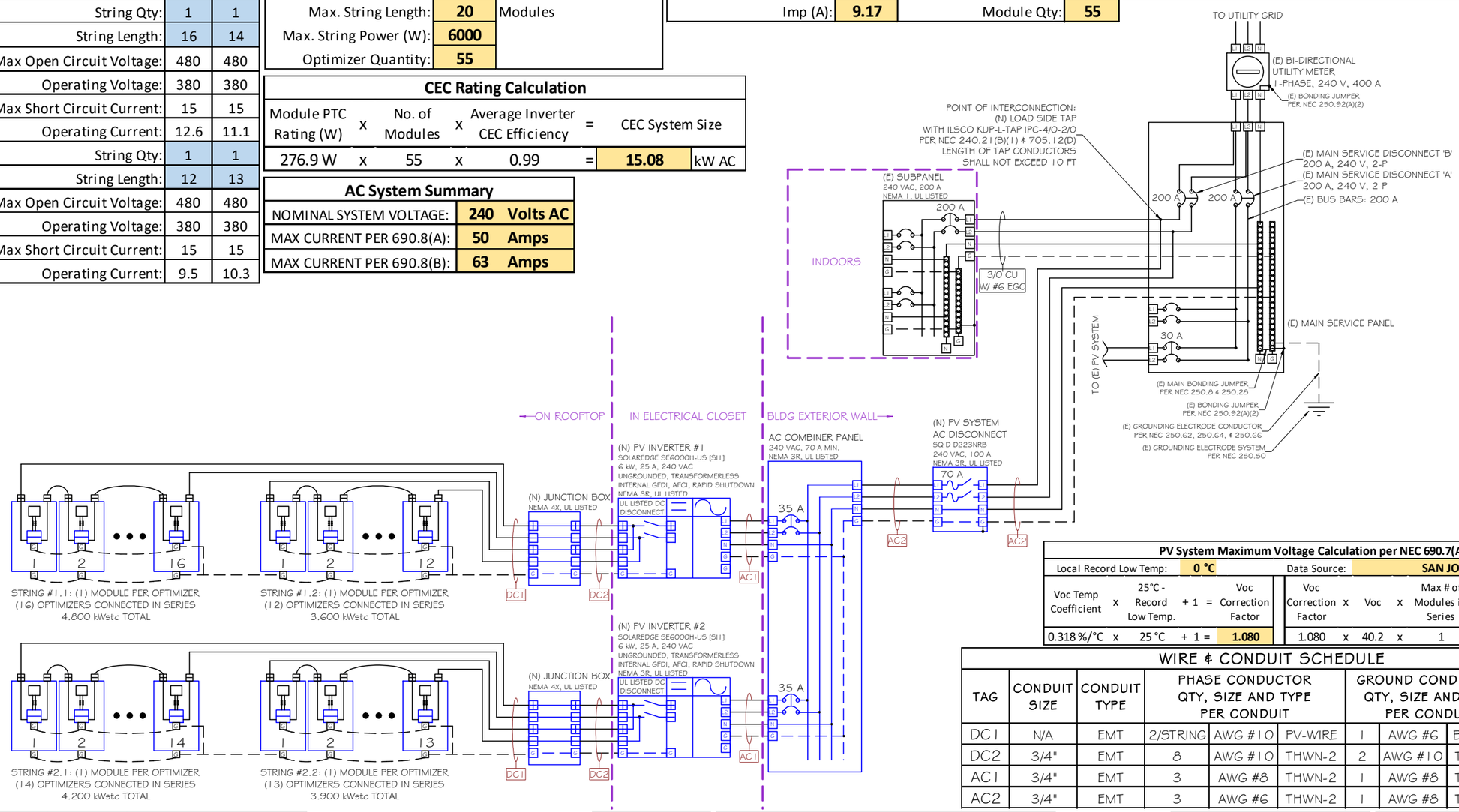

PV System Maximum Voltage Calculation per NEC 690.7(A)

Local Record Low Temp: **0 °C** | Data Source: **SAN JOSE INTL AP**

Voc Temp Coefficient	x	25°C - Record Low Temp.	+ 1 =	Voc Correction Factor	Voc Correction Factor	x	Voc	x	Max # of Modules in Series	=	Temperature Corrected Open Circuit Voltage	
0.318 %/°C	x	25 °C	+ 1 =	1.080	1.080	x	40.2	x	1	=	43.4	VDC

WIRE & CONDUIT SCHEDULE

TAG	CONDUIT SIZE	CONDUIT TYPE	PHASE CONDUCTOR QTY, SIZE AND TYPE PER CONDUIT			GROUND CONDUCTOR QTY, SIZE AND TYPE PER CONDUIT			EST. DIST.
DC1	N/A	EMT	2/STRING	AWG #10	PV-WIRE	1	AWG #6	BARE CU	25
DC2	3/4"	EMT	8	AWG #10	THWN-2	2	AWG #10	THWN-2	100
AC1	3/4"	EMT	3	AWG #8	THWN-2	1	AWG #8	THWN-2	10
AC2	3/4"	EMT	3	AWG #6	THWN-2	1	AWG #8	THWN-2	5

TAG	CIRCUIT ORIGIN	CIRCUIT DESTINATION	CONDUCTOR SPECIFICATIONS: MATERIAL	COND. TEMP. RATING	TRADE SIZE	AMPACITY PER 310.15(B)(16) & 310.5(B)(17)	REQUIRED CONDUCTOR AMPACITY: OPTIMIZER OUTPUT CURRENT	x	# OF PARALLEL STRINGS	=	MAX CURRENT PER 690.8(A)(1)	x	125% PER 690.8(B)(1)	=	MAX CURRENT PER 690.8(B)(1)	AMPACITY CHECK #1: MAX CURRENT PER 690.8(B)(1)	<	CONDUCTOR AMPACITY	CONDUCTOR TEMPERATURE DERATING: CIRCUIT ENVIRONMENT	LOCAL 2% AVG. HIGH TEMP (°C)	HEIGHT ABOVE ROOF (in)	TEMP. ADDER PER 310.15(B)(3)(c)	OPERATING TEMP (°C)	AMPACITY CORRECTION 310.15(B)(2)(a)	CONDUIT FILL DERATING: # OF UNGROUNDED CONDUCTORS	AMPACITY CORRECTION	CORRECTED AMPACITY CALCULATION: 90 °C CONDUCTOR AMPACITY	x	TEMP. DERATE	x	CONDUIT FILL DERATE	=	DERATED CONDUCTOR AMPACITY	AMPACITY CHECK #2: MAX CURRENT PER 690.8(A)(1)	<	DERATED CONDUCTOR AMPACITY	VOLTAGE DROP: EST. ONE-WAY DISTANCE	VOLTAGE DROP
DC1	PV STRING	JUNCTION BOX	COPPER	90°C	AWG #10	55 Amps	15.0	x	1	=	15.0 Amps	x	1.25	=	18.75 Amps	18.75 Amps	<	55 Amps	ROOFTOP, FREE AIR	29	-	N/A	44	0.87	N/A	1.00	55	x	0.87	x	1.00	=	47.9 Amps	15 Amps	<	47.9 Amps	25 ft	0.15%
DC2	JUNCTION BOX	INVERTER	COPPER	75°C	AWG #10	35 Amps	15.0	x	1	=	15.0 Amps	x	1.25	=	18.75 Amps	18.75 Amps	<	35 Amps	ROOFTOP, IN CONDUIT	29	1	22	51	0.76	8	0.70	40	x	0.76	x	0.70	=	21.3 Amps	15 Amps	<	21.3 Amps	100 ft	0.56%

TAG	CIRCUIT ORIGIN	CIRCUIT DESTINATION	CONDUCTOR SPECIFICATIONS: MATERIAL	COND. TEMP. RATING	TRADE SIZE	AMPACITY PER 310.15(B)(16) & 310.5(B)(17)	REQUIRED CONDUCTOR AMPACITY: INVERTER OUTPUT CURRENT	x	# OF INVERTERS	=	MAX CURRENT PER 690.8(A)(3)	x	125% PER 690.8(B)(1)	=	MAX CURRENT PER 690.8(B)(1)	AMPACITY CHECK #1: MAX CURRENT PER 690.8(B)(1)	<	CONDUCTOR AMPACITY	CONDUCTOR TEMPERATURE DERATING: CIRCUIT ENVIRONMENT	LOCAL 2% AVG. HIGH TEMP (°C)	EXPECTED OPERATING TEMP (°C)	AMPACITY CORRECTION 310.15(B)(2)(a)	CONDUIT FILL DERATING: # OF UNGROUNDED CONDUCTORS	AMPACITY CORRECTION	CORRECTED AMPACITY CALCULATION: 90 °C CONDUCTOR AMPACITY	x	TEMP. DERATE	x	CONDUIT FILL DERATE	=	DERATED CONDUCTOR AMPACITY	AMPACITY CHECK #2: MAX CURRENT PER 690.8(B)(2)	<	DERATED CONDUCTOR AMPACITY	VOLTAGE DROP: EST. ONE-WAY DISTANCE	VOLTAGE DROP
AC1	INVERTER	AC COMBINER PANEL	COPPER	90°C	AWG #8	55 Amps	25.0	x	1	=	25.0 Amps	x	1.25	=	31.25 Amps	31.3 Amps	<	55 Amps	EXT. BLDG. WALL (+15°C)	29	44	0.87	2	1.00	55	x	0.87	x	1.00	=	47.9 Amps	25.0 Amps	<	47.9 Amps	10 ft	0.36%
AC2	AC COMBINER PANEL	PV BREAKER	COPPER	75°C	AWG #6	65 Amps	25.0	x	2	=	50.0 Amps	x	1.25	=	62.5 Amps	62.5 Amps	<	65 Amps	EXT. BLDG. WALL (+15°C)	29	44	0.87	2	1.00	75	x	0.87	x	1.00	=	65.3 Amps	50.0 Amps	<	65.3 Amps	5 ft	0.13%

Project:
FRESNO, CA, 93711

Project Details:
16.50 kWstc, 12.00 kW AC
FRESNO, COUNTY OF

REVISIONS

DESCRIPTION	DATE	REV
ORIGINAL	9/13/2018	A

Sheet Title:
ELECTRICAL DIAGRAM

Sheet Number:
E1.0

Sheet Size:
ANSI B - 17" x 11"

DESIGN & DRAFTING BY:
TAYLOR BOHLEN

"You can't go around building a better world for people. Only people can build a better world for people. Otherwise it's just a cage."
- Terry Pratchett

SepiSolar
POWER BY DESIGN

Reviewed & Approved by:
CM

NABCEP CERTIFIED PV Installation Professional

WARNING
ELECTRIC SHOCK HAZARD
IF A GROUND FAULT IS INDICATED NORMALLY GROUNDED CONDUCTORS MAY BE ENERGIZED AND UNGROUNDED

REQ'D BY: NEC 690.5(C) — 1
APPLY TO:
INVERTER(S), IF NOT APPLIED BY MFR

SOLAR DC DISCONNECT

REQ'D BY: NEC 690.13(B) — 2
APPLY TO:
DC DISCONNECT SWITCHES

SOLAR AC DISCONNECT

REQ'D BY: NEC 690.13(B) — 3
APPLY TO:
AC DISCONNECT SWITCHES

WARNING
ELECTRIC SHOCK HAZARD
DO NOT TOUCH TERMINALS TERMINALS ON BOTH THE LINE AND LOAD SIDES MAY BE ENERGIZED IN THE OPEN POSITION

REQ'D BY: NEC 690.17(E) — 4
APPLY TO:
DISCONNECTS, FUSES, CIRCUIT BREAKERS

WARNING: PHOTOVOLTAIC POWER SOURCE

REQ'D BY: NEC 690.31(E)(3) — 5
APPLY TO:
JUNCTION BOXES, RACEWAYS, CABLE TRAYS, CONDUIT BODIES WITH AVAILABLE OPENINGS, EVERY 10', WITHIN 1' OF TURNS/PENETRATIONS

THIS ELECTRIC SYSTEM IS ALSO SERVED BY A PHOTOVOLTAIC SYSTEM

REQ'D BY: NEC 705.12(D)(3) — 6
APPLY TO:
ANY/ALL ELECTRICAL PANELS CONNECTED TO MULTIPLE POWER SOURCES

WARNING
ELECTRIC SHOCK HAZARD
THE DC CONDUCTORS OF THIS PHOTOVOLTAIC SYSTEM ARE UNGROUNDED AND MAY BE ENERGIZED

REQ'D BY: NEC 690.35(F) — 7
APPLY TO:
JUNCTION & COMBINERS BOXES, DC DISCONNECTS, OTHER SERVICEABLE DEVICES

THIS PHOTOVOLTAIC SYSTEM EQUIPPED WITH RAPID SHUTDOWN

REQ'D BY: NEC 690.12 — 8
APPLY TO:
PV SYSTEM MAIN AC DISCONNECT

CAUTION: DO NOT INSTALL ADDITIONAL LOADS IN THIS PANEL

REQ'D BY: NEC 705.12(D)(2)(3)(c) — 9
APPLY TO:
AC COMBINER PANEL

PHOTOVOLTAIC SYSTEM
AC DISCONNECT
OPERATING CURRENT: 63 AMPS
OPERATING VOLTAGE: 240 VOLTS

REQ'D BY: NEC 690.54 — 10
APPLY TO:
POINT OF INTERCONNECTION

PHOTOVOLTAIC POWER SOURCE
OPERATING CURRENT: 16.5 AMPS
OPERATING VOLTAGE: 380 VOLTS
MAX SYSTEM VOLTAGE: 480 VOLTS
MAX SYSTEM CURRENT: 30 AMPS

REQ'D BY: NEC 690.53 — 11
APPLY TO:
INVERTER #1

PHOTOVOLTAIC POWER SOURCE
OPERATING CURRENT: 16.5 AMPS
OPERATING VOLTAGE: 380 VOLTS
MAX SYSTEM VOLTAGE: 480 VOLTS
MAX SYSTEM CURRENT: 30 AMPS

REQ'D BY: NEC 690.53 — 12
APPLY TO:
INVERTER #2

MAXIMUM DC CONDUCTORS PER CONDUIT

	Qty.	Wire Size	Wire Type	Wire Area	x	Qty.	=	Total Area	Conduit Type:	EMT
CONDUIT 1	10	AWG #10	THWN-2	0.0211	x	10	=	0.2110	Minimum Size Required:	3/4"
					x		=			
					x		=		Conduit Area:	0.533 sq. in.
					x		=		x 40%	
				Total Conduit Fill (sq. in.):				0.211	<	0.2133
CONDUIT 2	Qty.	Wire Size	Wire Type	Wire Area	x	Qty.	=	Total Area	Conduit Type:	EMT
	16	AWG #10	THWN-2	0.0211	x	16	=	0.3376	Minimum Size Required:	1"
					x		=			
					x		=		Conduit Area:	0.864 sq. in.
					x		=		x 40%	
				Total Conduit Fill (sq. in.):				0.3376	<	0.3457

UPDATED AMPACITY CALCULATION FOR EXISTING CONDUITS

TAG	CIRCUIT ORIGIN	CIRCUIT DESTINATION	CONDUCTOR SPECIFICATIONS				REQUIRED CONDUCTOR AMPACITY								AMPACITY CHECK #1			CONDUCTOR TEMPERATURE DERATING						CONDUIT FILL DERATING		CORRECTED AMPACITY CALCULATION							AMPACITY CHECK #2					VOLTAGE DROP	
			MATERIAL	COND. TEMP. RATING	TRADE SIZE	AMPACITY PER 310.15(B)(16) & 310.5(B)(17)	OPTIMIZER OUTPUT CURRENT	x	# OF PARALLEL STRINGS	=	MAX CURRENT PER 690.8(A)(1)	x	125% PER 690.8(B)(1)	=	MAX CURRENT PER 690.8(B)(1)	MAX CURRENT PER 690.8(B)(1)	<	CONDUCTOR AMPACITY	CIRCUIT ENVIRONMENT	LOCAL 2% AVG. HIGH TEMP (°C)	HEIGHT ABOVE ROOF (in)	TEMP. ADDER PER 310.15(B)(3)(c)	OPERATING TEMP (°C)	AMPACITY CORRECTION 310.15(B)(2)(a)	# OF UNGROUNDED CONDUCTORS	AMPACITY CORRECTION	90 °C CONDUCTOR AMPACITY	x	TEMP. DERATE	x	CONDUIT FILL DERATE	=	DERATED CONDUCTOR AMPACITY	MAX CURRENT PER 690.8(A)(1)	<	DERATED CONDUCTOR AMPACITY		EST. ONE-WAY DISTANCE	VOLTAGE DROP
EXISTING CONDUIT	JUNCTION BOX	JUNCTION BOX	COPPER	75°C	AWG #10	35 Amps	15.0	x	1	=	15.0 Amps	x	1.25	=	18.75 Amps	18.75 Amps	<	35 Amps	ROOFTOP, IN CONDUIT	29	1	22	51	0.76	16	0.50	40	x	0.76	x	0.50	=	15.2 Amps	15 Amps	<	15.2 Amps		35 ft	0.18%

SIGNAGE REQUIREMENTS

1.) RED BACKGROUND
2.) WHITE LETTERING
3.) MIN. 3/8" LETTER HEIGHT
4.) ALL CAPITAL LETTERS
5.) ARIAL OR SIMILAR FONT
6.) WEATHER RESISTANT MATERIAL, PER UL 969

SCALE: 1" = 4"

Project:
FRESNO, CA, 93711

Project Details:
16.50 kWstc, 12.00 kW AC
FRESNO, COUNTY OF

REVISIONS

DESCRIPTION	DATE	REV
ORIGINAL	9/13/2018	A

Sheet Title:
SAFETY PLACARDS

Sheet Number:
E2.0

Sheet Size:
ANSI B - 17" x 11"

DESIGN & DRAFTING BY:
TAYLOR BOHLEN

"You can't go around building a better world for people. Only people can build a better world for people. Otherwise it's just a cage."
- Terry Pratchett

SepiSolar
POWER BY DESIGN

Reviewed & Approved by:
CM

NABCEP CERTIFIED PV Installation Professional